KAG-Identnummer 437147, KV71149, 24.02.22, Ra.
AVX9176001701106

Standard IDC 18-24 AWG: WTB

00-9176

AVX INTERCONNECT
A KYOCERA GROUP COMPANY

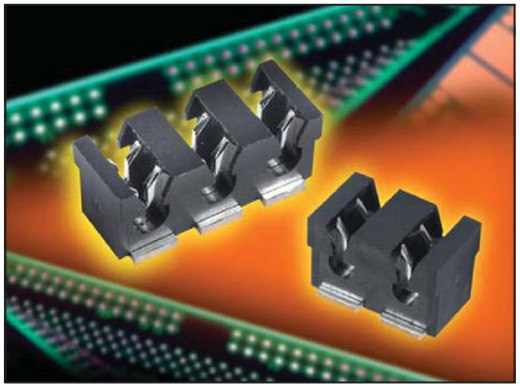

The 917X series of surface mount Insulation Displacement Connectors (IDC) were developed to meet the harsh automotive and industrial market applications for connecting individual wires directly to a PCB ranging from 14 AWG to 28 AWG. This industry proven contact system has been tested to automotive levels of shock, vibration, and temperature cycling to prove their reliability and robustness. The simplicity of inserting a wire into the connector with a small tool allows a wide range of devices to be connected to the PCB without soldering. In SSL applications specifically, these connectors are used to bring power and signal onto the PCB or are used to daisy chain multiple boards together in a long string. While the IDC contact provides a gas-tight connection to conductor of the wire, the housing has been designed to grab the insulation of the wire to provide a positive strain relief even in the harshest conditions. In case of repair, the wires can be removed and replace up to three times.

The 9176 series accepts 18 AWG to 24 AWG wires with an insulation diameter ranging from 1.1mm to 2.1mm. These dual contact connectors support a 10 amp current rating with two large SMT solder tails per wire to provide maximum stability on the PCB. Available in 1p-3p configuration, these connectors can be end stackable for higher pin counts. The 9176 series also comes with optional locking strain relief caps that act as the termination tool for severe vibration applications.

APPLICATIONS

- Connecting discrete wire components directly to the PCB
- Bringing power and signals onto a PCB
- Daisy chaining PCB's together to create a continuous string of boards
- Application Notes: refer to 201-01-124

FEATURES AND BENEFITS

- IDC contact provides a gas-tight connection to the PCB for long term reliability
- Connector housing captures the wire insulation for positive strain relief
- Tested to automotive levels on shock, vibration and temperature cycling for reliability
- Low and high volume assembly tools to match production volumes
- Reduced total applied cost versus solder or crimp processes
- Optional thru and end caps lock in place to provide maximum strain relief
- High temperature insulator capable to 260ºC reflow soldering processes

ELECTRICAL

- Current Rating: 10 Amp / Contact
- Voltage Rating: 300 VAC

ENVIRONMENTAL

- Operating Temperature: -40ºC to +125ºC

MECHANICAL

- Insulator Material: Nylon 46: UL94V0
- Contact Material: Phosphor Bronze
- Plating: Tin over Nickel
- Durability: 3 Cycles

HOW TO ORDER

00 — Prefix

9176 — Series

00X — Number of Ways

Code	No of Ways	Details
001	1	Page 3
002	2	Page 4
003	3	Page 5

0XX — Wire Gauge Size

Code	Accepted Wire Gauge	Wire Insulation	Cap Code Pages 6-7
001	18 Gauge Stranded	Ø 1.6-2.1	021
011	20 Gauge Solid or Stranded	Ø 1.6-2.1	021
022	22 Gauge Solid or Stranded	Ø 1.1-1.6	016
032	24 Gauge Solid or Stranded	Ø 1.1-1.6	016

X — Insulator Color
9 = UL White
8 = UL Black
Special Order

06 — Plating Option
06 = Pure Tin all over

RoHS COMPLIANT

Certification: UL File #E90723

Standard IDC 18-24 AWG: WTB

00-9176

AVX INTERCONNECT
A KYOCERA GROUP COMPANY

CONNECTOR/TOOLING PART NUMBER MATRIX

SERIES 9176 IDC					HAND INSERTION TOOLING*			ACCESSORY CAPS	
AWG	Wire Insulation	Positions	Color	Part Number	Plastic (medium volume)	Metal (high volume)	Mass Termination	Through Wire	Wire Stop
18	Ø 1.6 - 2.1	1p	Black	009176001001806	069176701601000	069176701701000	N/A	609176001021000	609176001021099
18	Ø 1.6 - 2.1	1p	White	009176001001906	069176701601000	069176701701000	N/A	609176001021100	609176001021199
18	Ø 1.6 - 2.1	2p	Black	009176002001806	069176701601000	069176701701000	069176701701002	609176002021000	609176002021099
18	Ø 1.6 - 2.1	2p	White	009176002001906	069176701601000	069176701701000	069176701701002	609176002021100	609176002021199
18	Ø 1.6 - 2.1	3p	Black	009176003001806	069176701601000	069176701701000	069176701701003	609176003021000	609176003021099
18	Ø 1.6 - 2.1	3p	White	009176003001906	069176701601000	069176701701000	069176701701003	609176003021100	609176003021199
20	Ø 1.6 - 2.1	1p	Black	009176001011806	069176701601000	069176701701000	N/A	609176001021000	609176001021099
20	Ø 1.6 - 2.1	1p	White	009176001011906	069176701601000	069176701701000	N/A	609176001021100	609176001021199
20	Ø 1.6 - 2.1	2p	Black	009176002011806	069176701601000	069176701701000	069176701701002	609176002021000	609176002021099
20	Ø 1.6 - 2.1	2p	White	009176002011906	069176701601000	069176701701000	069176701701002	609176002021100	609176002021199
20	Ø 1.6 - 2.1	3p	Black	009176003011806	069176701601000	069176701701000	069176701701003	609176003021000	609176003021099
20	Ø 1.6 - 2.1	3p	White	009176003011906	069176701601000	069176701701000	069176701701003	609176003021100	609176003021199
22	Ø 1.1 - 1.6	1p	Black	009176001022806	069176701602000	069176701702000	N/A	609176001016000	609176001016099
22	Ø 1.1 - 1.6	1p	White	009176001022906	069176701602000	069176701702000	N/A	609176001016100	609176001016199
22	Ø 1.1 - 1.6	2p	Black	009176002022806	069176701602000	069176701702000	069176701702002	609176002016000	609176002016099
22	Ø 1.1 - 1.6	2p	White	009176002022906	069176701602000	069176701702000	069176701702002	609176002016100	609176002016199
22	Ø 1.1 - 1.6	3p	Black	009176003022806	069176701602000	069176701702000	069176701702003	609176003016000	609176003016099
22	Ø 1.1 - 1.6	3p	White	009176003022906	069176701602000	069176701702000	069176701702003	609176003016100	609176003016199
24	Ø 1.1 - 1.6	1p	White	009176001032106	069176701602000	069176701702000	N/A	609176001016100	609176001016199
24	Ø 1.1 - 1.6	1p	Black	009176001032806	069176701602000	069176701702000	N/A	609176001016000	609176001016099
24	Ø 1.1 - 1.6	1p	White	009176001032906	069176701602000	069176701702000	N/A	609176001016100	609176001016199
24	Ø 1.1 - 1.6	2p	Black	009176002032806	069176701602000	069176701702000	069176701702002	609176002016000	609176002016099
24	Ø 1.1 - 1.6	2p	White	009176002032906	069176701602000	069176701702000	069176701702002	609176002016100	609176002016199
24	Ø 1.1 - 1.6	3p	Black	009176003032806	069176701602000	069176701702000	069176701702003	609176003016000	609176003016099
24	Ø 1.1 - 1.6	3p	White	009176003032906	069176701602000	069176701702000	069176701702003	609176003016100	609176003016199
* Hand Insertion Tooling - Universal Hand Tool 067000773001000; Consult Application Notes 201-01-124									

18-24 AWG 1 WAY IDC CONNECTOR

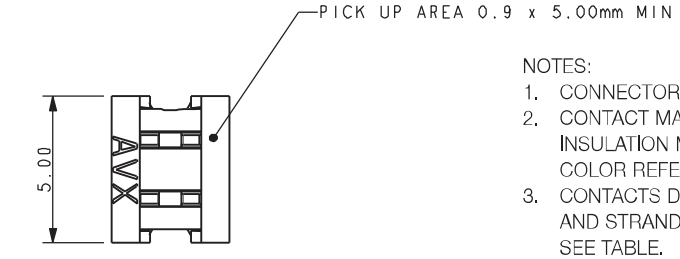

NOTES:

1. CONNECTOR FOR IDC WIRE TO BOARD CONNECTION.
2. CONTACT MATERIAL: PHOSPHOR BRONZE.
   INSULATION MATERIAL: HIGH TEMPERATURE NYLON 46.
   COLOR REFER TO PAGE 1.
3. CONTACTS DESIGNED TO ACCEPT BETWEEN 20AWG AND 24AWG SOLID AND STRANDED WIRES. 18AWG WILL ONLY ACCEPT STRANDED WIRES, SEE TABLE.
4. ALL DIMENSIONS FOR REFERENCE UNLESS OTHERWISE STATED.
5. FOR FULL PRODUCT SPECIFICATION ON STANDARD CONNECTORS REFER TO ELCO SPEC 201-01-106
6. APPLICATION NOTES 201-01-124.
7. FOR PCB SPACE RESTRICTED BY WIRE ASSEMBLY TOOLING REFER TO PAGE 6.
8. FOR HAND WIRE ASSEMBLY TOOLING REFER TO PAGE 8.
9. FOR UL PRODUCT CODES UL REFERENCE E90723 (US AND CANADA).
10. ALL DIMENSIONS ±0.20 TOLERANCE SPECIFIED.

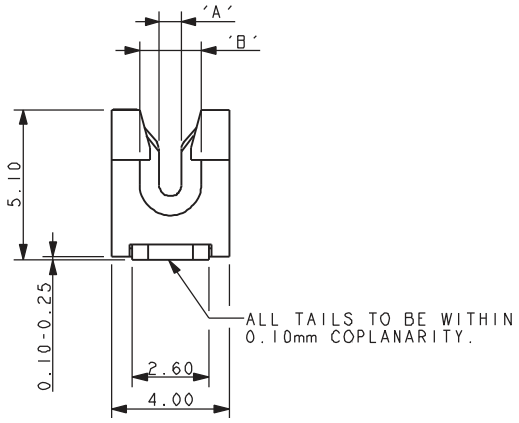

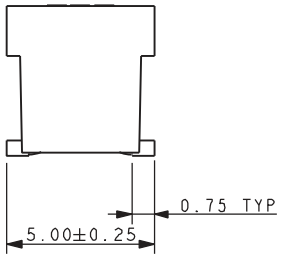

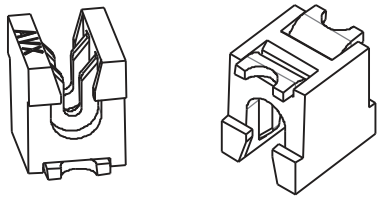

Code	Accepted Wire Gauge	A	Wire Insulation	B
001	18AWG Stranded	0.72	Ø 1.6-2.1	2.1
011	20AWG Solid and Stranded	0.60	Ø 1.6-2.1	2.1
022	22AWG Solid and Stranded	0.47	Ø 1.1-1.6	1.6
032	24AWG Solid and Stranded	0.37	Ø 1.1-1.6	1.6

SMT PCB LAYOUT

PURE TIN PADS

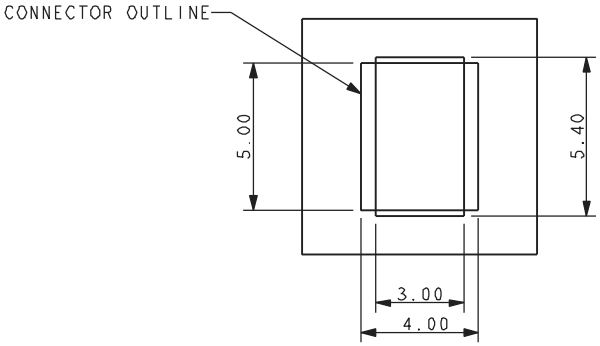

PACKING DETAILS

REEL QTY	1000
LEADER	480MM
TRAILER	120MM

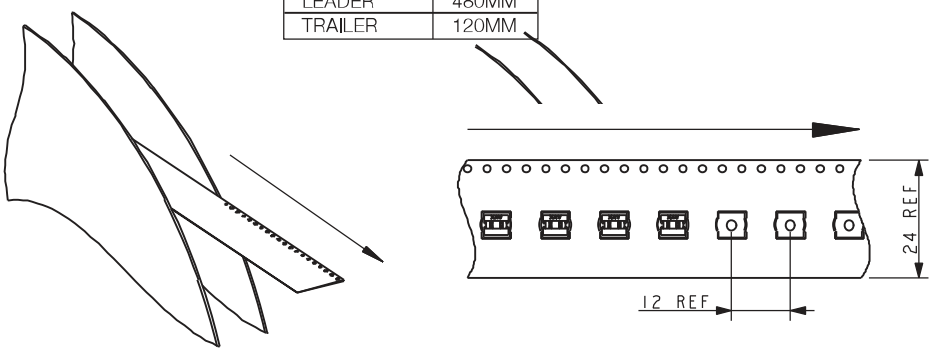

18-24 AWG 2 WAY IDC CONNECTOR

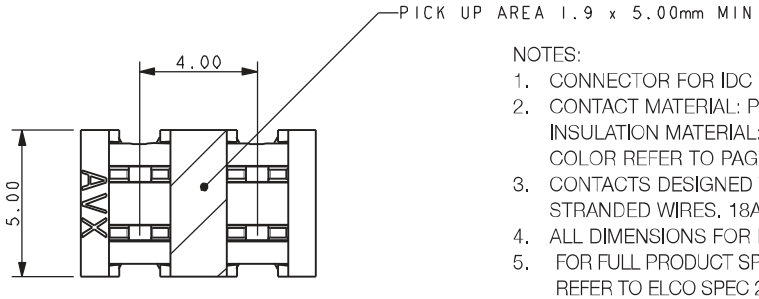

NOTES:

1. CONNECTOR FOR IDC WIRE TO BOARD CONNECTION.
2. CONTACT MATERIAL: PHOSPHOR BRONZE.
   INSULATION MATERIAL: HIGH TEMPERATURE NYLON 46.
   COLOR REFER TO PAGE 1.
3. CONTACTS DESIGNED TO ACCEPT BETWEEN 20AWG AND 24AWG SOLID AND STRANDED WIRES. 18AWG WILL ONLY ACCEPT STRANDED WIRES, SEE TABLE.
4. ALL DIMENSIONS FOR REFERENCE UNLESS OTHERWISE STATED.
5. FOR FULL PRODUCT SPECIFICATION ON STANDARD CONNECTORS REFER TO ELCO SPEC 201-01-106. UL COMPONENTS REFER TO ELCO SPECIFICATION 201-01-106UL.
6. APPLICATION NOTES 201-01-124.
7. FOR PCB SPACE RESTRICTED BY WIRE ASSEMBLY TOOLING REFER TO PAGE 6.
8. FOR HAND WIRE ASSEMBLY TOOLING REFER TO PAGE 8.
9. FOR PRESS WIRE ASSEMBLY TOOLING REFER TO PAGE 9
10. FOR ACCESSORY CAPS REFER TO PAGE 6 AND 7.
10. FOR UL PRODUCT CODES UL REFERENCE E90723 (US AND CANADA).
11. ALL DIMENSIONS ±0.20 TOLERANCE SPECIFIED.

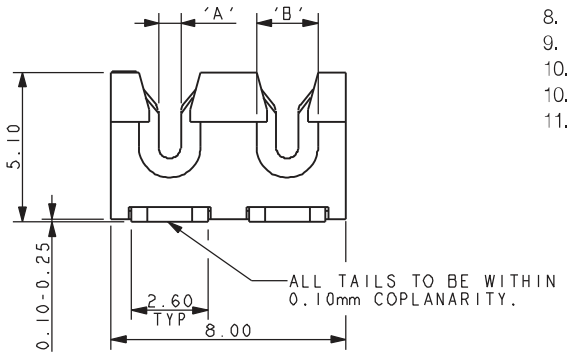

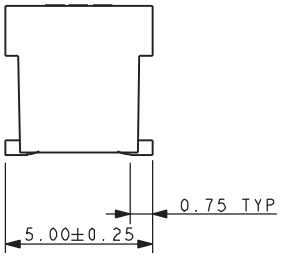

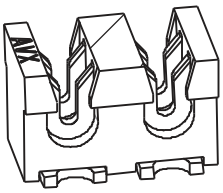

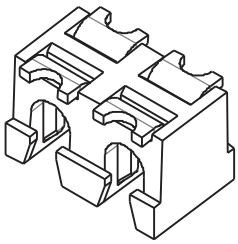

Code	Accepted Wire Gauge	A	Wire Insulation	B
001	18AWG Stranded	0.72	Ø 1.6-2.1	2.1
011	20AWG Solid and Stranded	0.60	Ø 1.6-2.1	2.1
022	22AWG Solid and Stranded	0.47	Ø 1.1-1.6	1.6
032	24AWG Solid and Stranded	0.37	Ø 1.1-1.6	1.6

SMT PCB LAYOUT

PURE TIN PADS

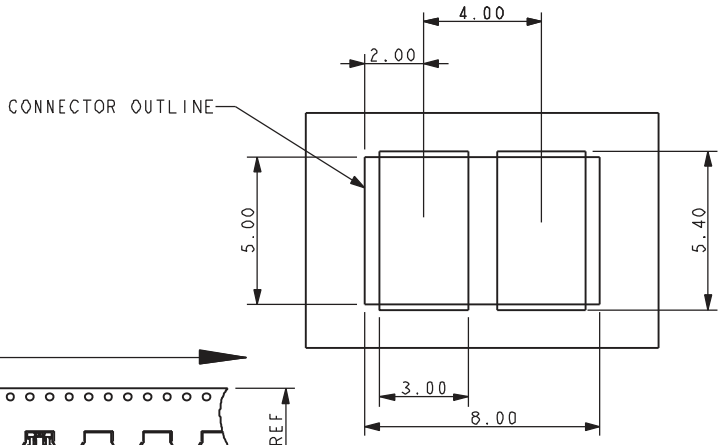

PACKING DETAILS

REEL QTY	1000
LEADER	480MM
TRAILER	120MM

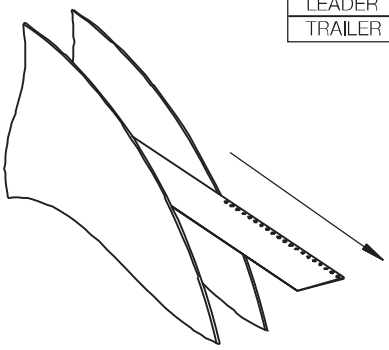

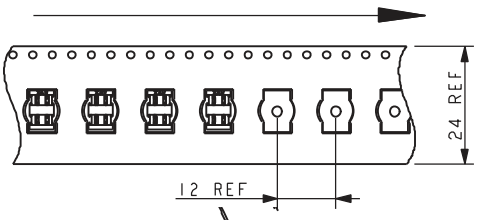

18-24 AWG 3 WAY IDC CONNECTOR

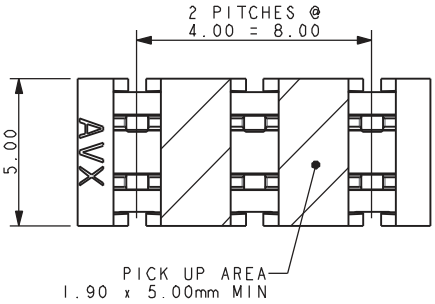

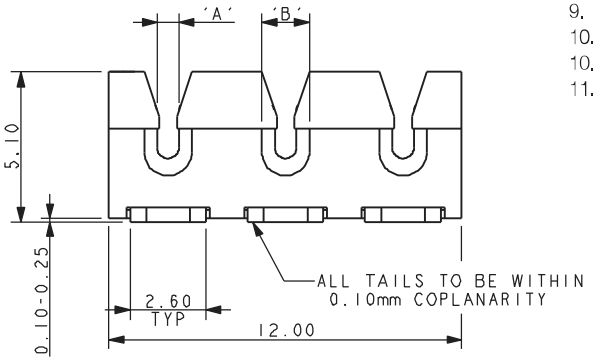

NOTES:

1. CONNECTOR FOR IDC WIRE TO BOARD CONNECTION.
2. CONTACT MATERIAL: PHOSPHOR BRONZE.
   INSULATION MATERIAL: HIGH TEMPERATURE NYLON 46.
   COLOR REFER TO PAGE 1.
3. CONTACTS DESIGNED TO ACCEPT BETWEEN 20AWG AND 24AWG SOLID AND STRANDED WIRES. 18AWG WILL ONLY ACCEPT STRANDED WIRES, SEE TABLE.
4. ALL DIMENSIONS FOR REFERENCE UNLESS OTHERWISE STATED.
5. FOR FULL PRODUCT SPECIFICATION ON STANDARD CONNECTORS REFER TO ELCO SPEC 201-01-106. UL COMPONENTS REFER TO ELCO SPECIFICATION 201-01-106UL.
6. APPLICATION NOTES 201-01-124.
7. FOR PCB SPACE RESTRICTED BY WIRE ASSEMBLY TOOLING REFER TO PAGE 8.
8. FOR HAND WIRE ASSEMBLY TOOLING REFER TO PAGE 8.
9. FOR PRESS WIRE ASSEMBLY TOOLING REFER TO PAGE 9
10. FOR ACCESSORY CAPS REFER TO PAGE 6 AND 7.
10. FOR UL PRODUCT CODES UL REFERENCE E90723 (US AND CANADA).
11. ALL DIMENSIONS ±0.20 TOLERANCE SPECIFIED.

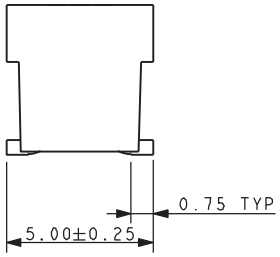

Code	Accepted Wire Gauge	A	Wire Insulation	B
001	18AWG Stranded	0.72	Ø 1.6-2.1	2.1
011	20AWG Solid and Stranded	0.60	Ø 1.6-2.1	2.1
022	22AWG Solid and Stranded	0.47	Ø 1.1-1.6	1.6
032	24AWG Solid and Stranded	0.37	Ø 1.1-1.6	1.6

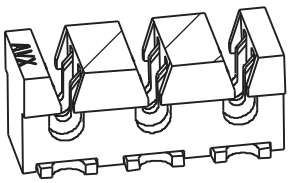

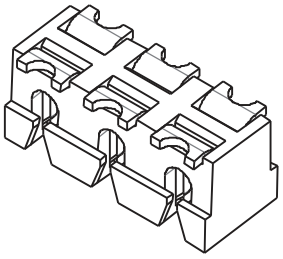

SMT PCB LAYOUT

PURE TIN PADS

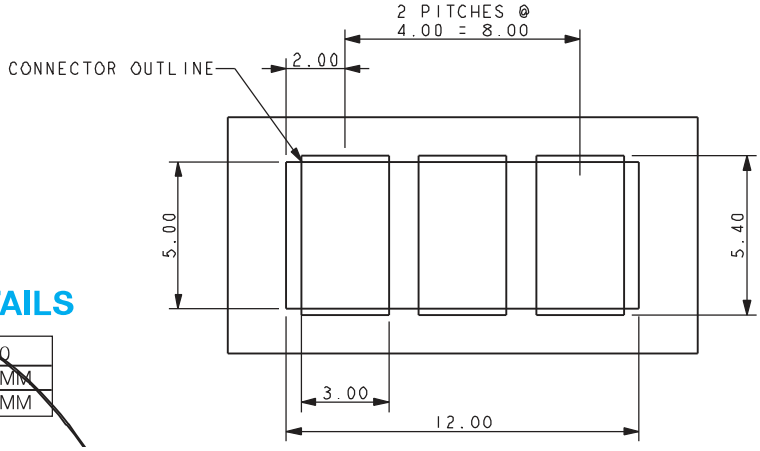

PACKING DETAILS

REEL QTY	1000
LEADER	480MM
TRAILER	120MM

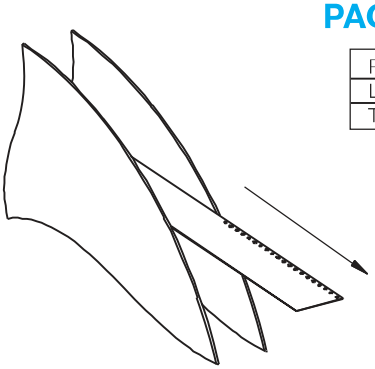

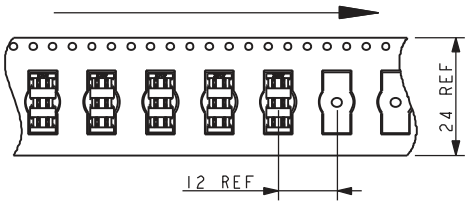

60-9176-00X-0XX-X00

ACCESSORY CAP – THROUGH WIRE

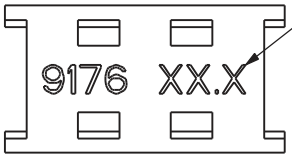

TEXT, REFER TO TABLE
INDICATES CABLE SIZE Ø1.6 OR Ø2.1

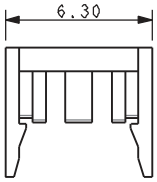

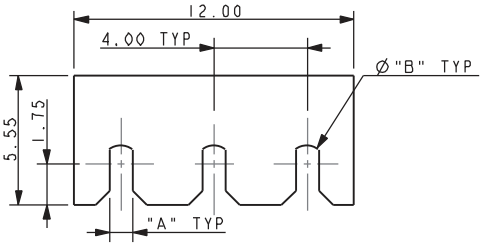

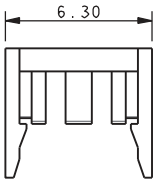

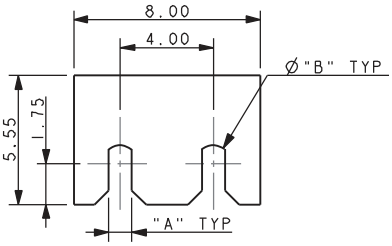

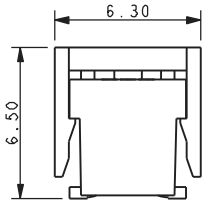

ASSEMBLED CONNECTOR

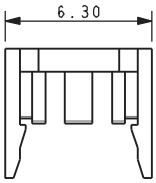

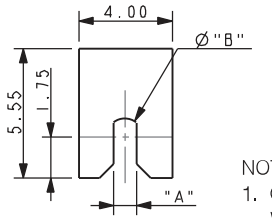

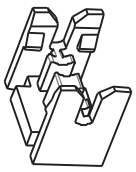

60-9176-001-016-X00

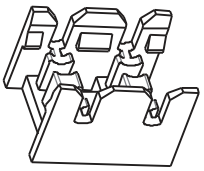

60-9176-002-016-X00

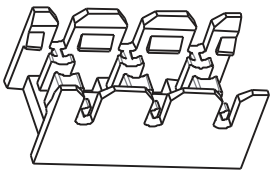

60-9176-003-016-X00

60-9176-001-021-X00

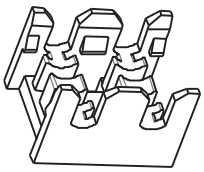

60-9176-002-021-X00

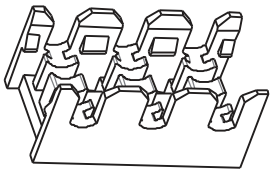

60-9176-003-021-X00

NOTES:

1. CAP FOR IDC WIRE TO BOARD CONNECTION, 1, 2 AND 3 WAY, THROUGH WIRE.
2. FOR USE WITH STANDARD 9176 IDC CONNECTORS, SEE PAGE 2 FOR THE CORRECT PART CODE TO MATCH WIRE.
3. CAP MATERIAL: GLASS FILLED NYLON 46, FOR COLORS SEE TABLE BELOW.
4. DIMENSIONS A, B AND TEXT, SEE TABLE BELOW.
5. CAPS DESIGNED TO ACCOMMODATE WIRE INSULATION DIAMETERS 1.1MM TO 1.6MM AND 1.6MM TO 2.1MM.
6. ALL DIMENSIONS SHOWN ARE REFERENCE DIMENSIONS.
7. PACKED IN BAGS, 1000 PIECES PER BAG.
8. ONE WAY CAP ASSEMBLY AID, REFER TO PAGE 10.
9. ALL DIMENSIONS ±0.20 TOLERANCE SPECIFIED.

Code	Slot A	Diameter B	Text
016	1.00	1.60	Ø1.6
021	1.50	2.10	Ø2.1

Color	X00
Black	000
White	100

60-9176-00X-0XX-X99

ACCESSORY CAP – WIRE STOP

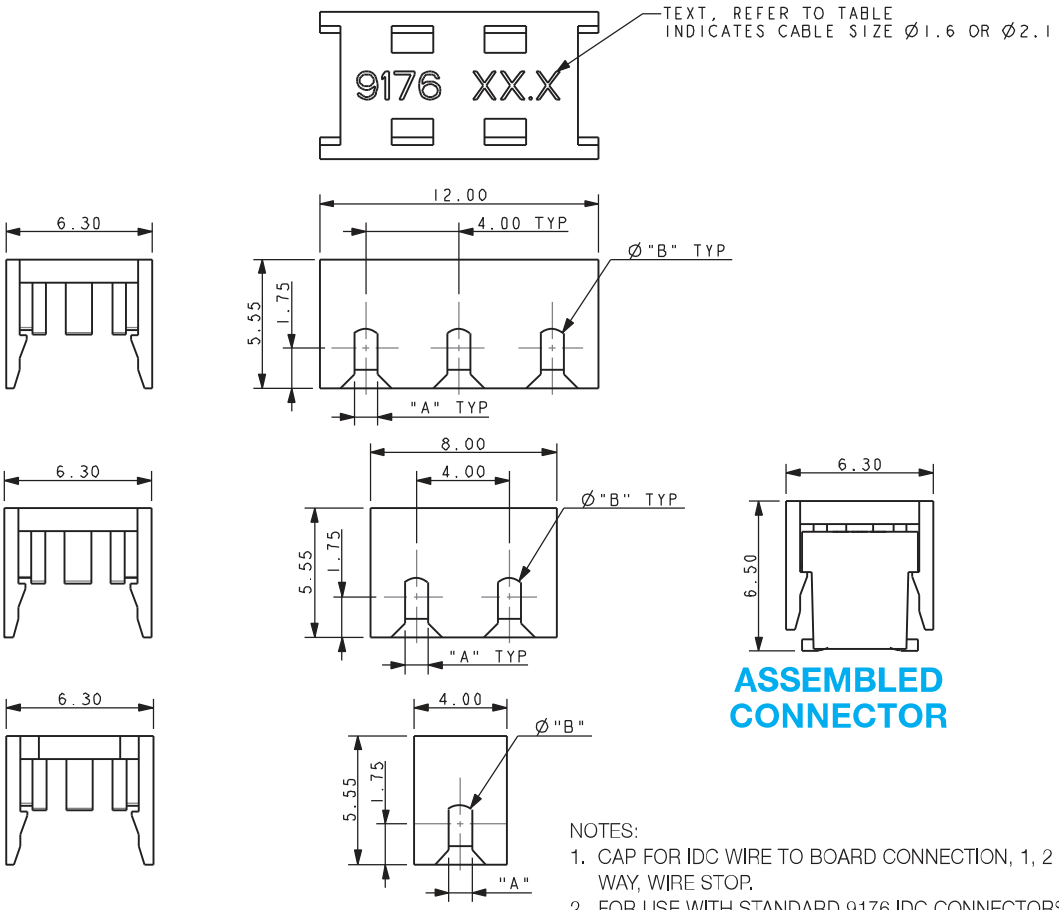

ASSEMBLED CONNECTOR

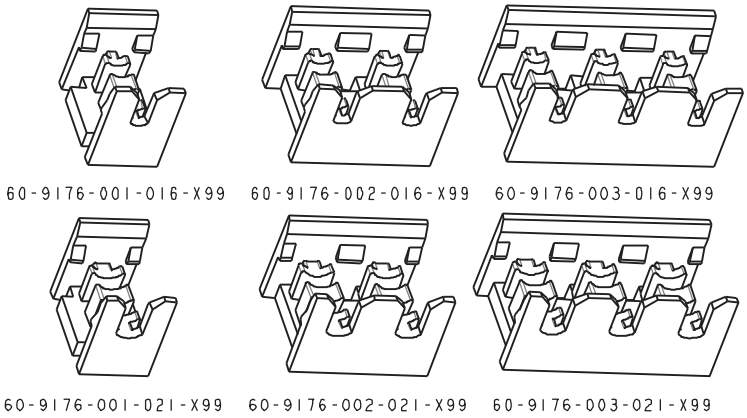

NOTES:

1. CAP FOR IDC WIRE TO BOARD CONNECTION, 1, 2 AND 3 WAY, WIRE STOP.
2. FOR USE WITH STANDARD 9176 IDC CONNECTORS, SEE PAGE 2 FOR THE CORRECT PART CODE TO MATCH WIRE.
3. CAP MATERIAL: GLASS FILLED NYLON 46, FOR COLORS SEE TABLE BELOW.
4. DIMENSIONS A, B AND TEXT, SEE TABLE BELOW.
5. CAPS DESIGNED TO ACCOMMODATE WIRE INSULATION DIAMETERS 1.1MM TO 1.6MM AND 1.6MM TO 2.1MM.
6. ALL DIMENSIONS SHOWN ARE REFERENCE DIMENSIONS.
7. PACKED IN BAGS, 1000 PIECES PER BAG.
8. ONE WAY CAP ASSEMBLY AID, REFER TO PAGE 10.
9. ALL DIMENSIONS ±0.20 TOLERANCE SPECIFIED.

Code	Slot A	Diameter B	Text
016	1.00	1.60	Ø1.6
021	1.50	2.10	Ø2.1

Color	X00
Black	000
White	100

HAND INSERTION TOOLING FOR SINGLE 18/24 GAUGE WIRE

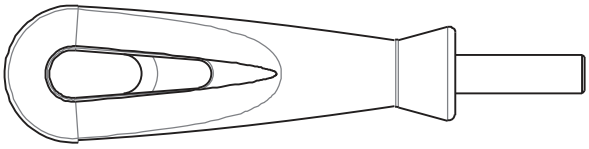

UNIVERSAL HANDLE

Details	Tool Part Number
6.35 A/F HEX BIT HOLDER	06 7000 7730 01 000

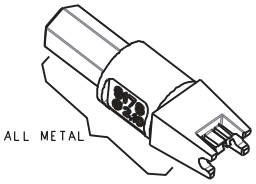

HIGH PRODUCTION
Metal

Max Insulation Dia	Tool Part Number
Ø2.10	06 9176 7017 01 000
Ø1.60	06 9176 7017 02 000

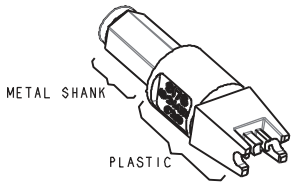

MEDIUM PRODUCTION
Metal/Plastic

Max Insulation Dia	Tool Part Number
Ø2.10	06 9176 7016 01 000
Ø1.60	06 9176 7016 02 000

CLEARANCE AREA ON PCB FOR HAND TOOLING

1 WAY

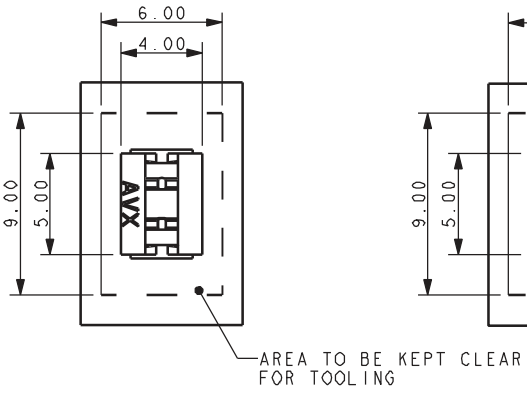

2 WAY

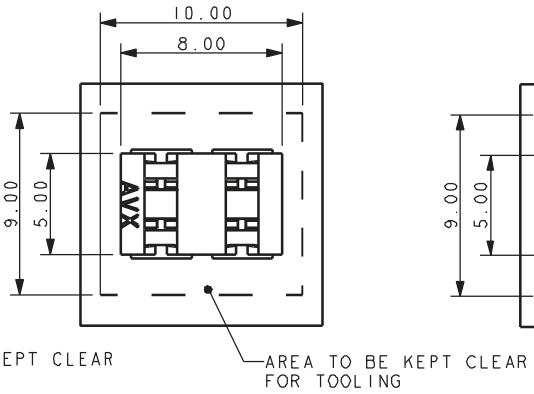

3 WAY

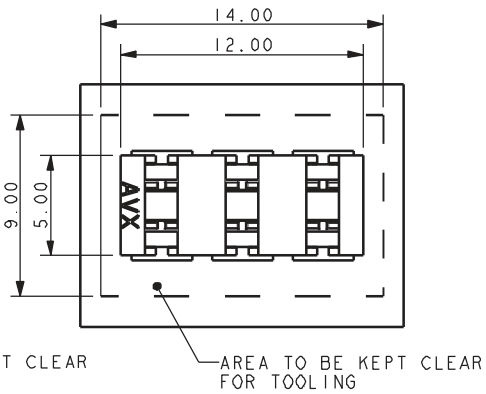

INSERTION TOOLING
REQUIRES HAND PRESS WITH FLAT ROCK PLATES

2 WAY

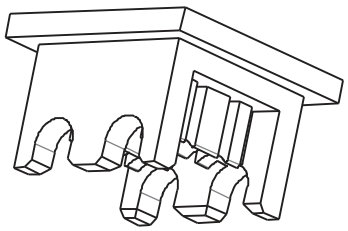

3 WAY

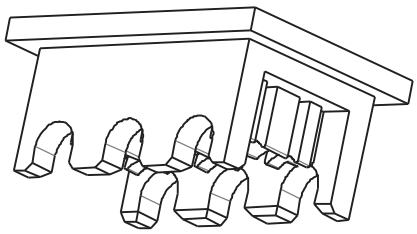

HIGH PRODUCTION
Metal

No. of Ways	Max Insulation Dia	Tool Part Number
2	Ø2.10	06 9176 7017 01 002
	Ø1.60	06 9176 7017 02 002
3	Ø2.10	06 9176 7017 01 003
	Ø1.60	06 9176 7017 02 003

PCB RESTRICTED AREAS FOR PRESS ASSEMBLY TOOLING

2 WAY

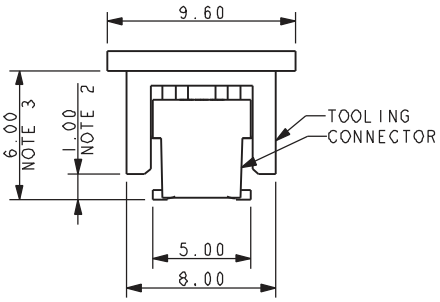

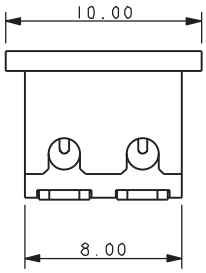

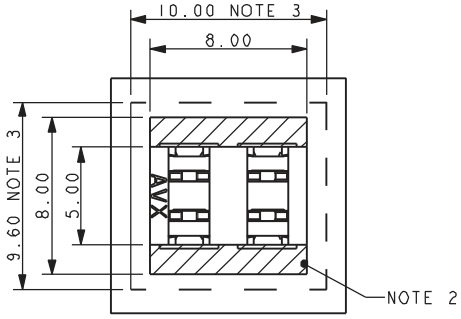

3 WAY

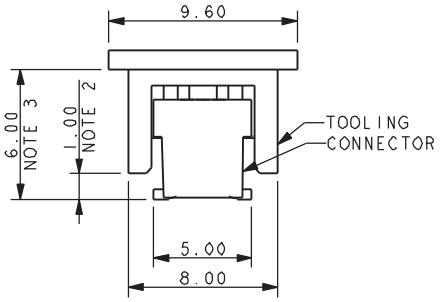

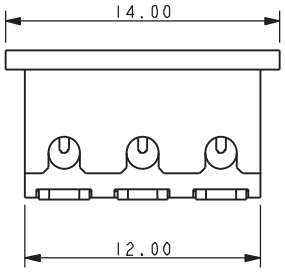

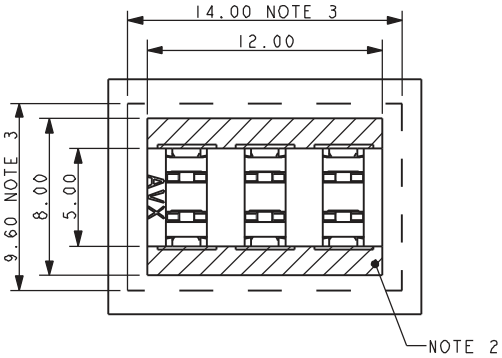

NOTES:
1. DIMENSIONS SHOWN ARE REFERENCE DIMENSIONS.
2. MAXIMUM COMPONENT HEIGHT 1.00MM IN THIS AREA.
3. MAXIMUM COMPONENT HEIGHT 6.00MM IN THIS AREA.
4. THE SAME RESTRICTIONS APPLY TO ALL WIRE INSULATION DIAMETERS.
5. 2 AND 3 WAY TOOLS ONLY, FOR USE UNDER HAND PRESS WITH FLAT PLATES.
6. FOR HAND TOOLING REFER TO PAGE 8.
7. ALL DIMENSIONS ±0.20 UNLESS TOLERANCE SPECIFIED.

HAND INSERTION TOOLING
FOR ONE WAY CAP INSERTION

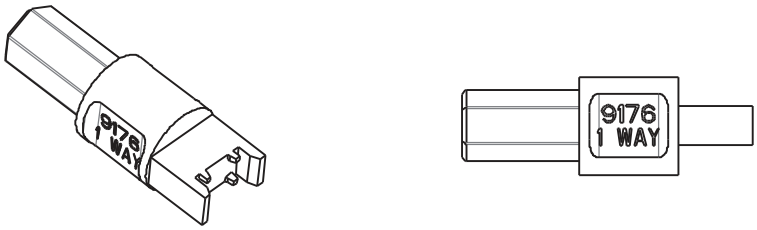

06-9176-7028-01-000

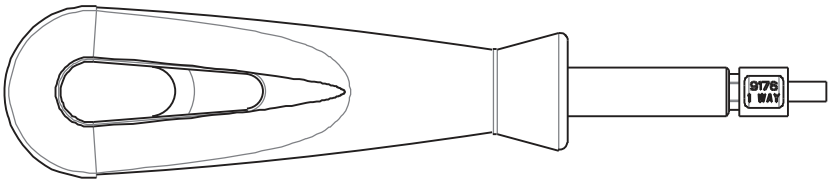

TO BE USED WITH 06-7000-7730-01-000
UNIVERSAL HANDLE

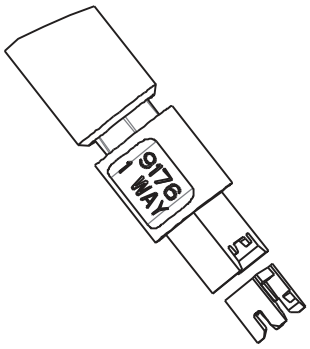

FOR ASSEMBLY INSTRUCTION REFER TO 201-01-124 APPLICATION NOTES

CLEARANCE AREA ON PCB FOR HAND TOOLING

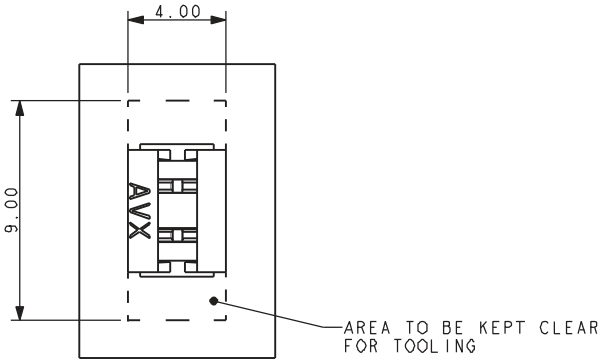

ASSEMBLED CONNECTOR

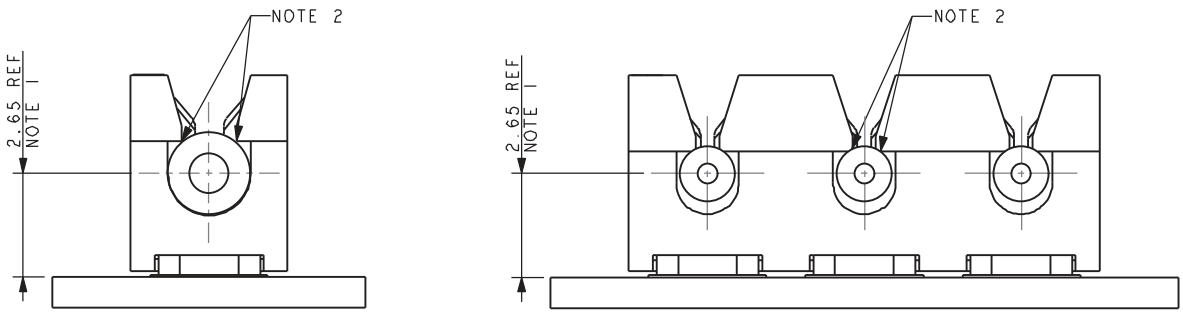

STANDARD CONNECTOR

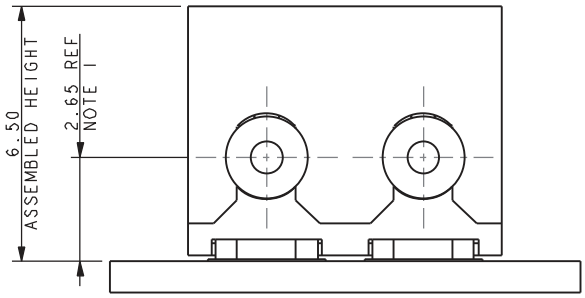

CONNECTOR WITH CAP

NOTES:
1. ASSEMBLED HEIGHTS INCLUDE 0.10MM ALLOWANCE FOR PAD AND SOLDER THICKNESS. NO ALLOWANCE HAS BEEN MADE FOR ANY SOLDER RESIST OR OTHER FEATURES.
2. WHEN THE WIRE IS ASSEMBLED THE INSULTATION SHOULD BE TRAPPED BY THESE EDGES.