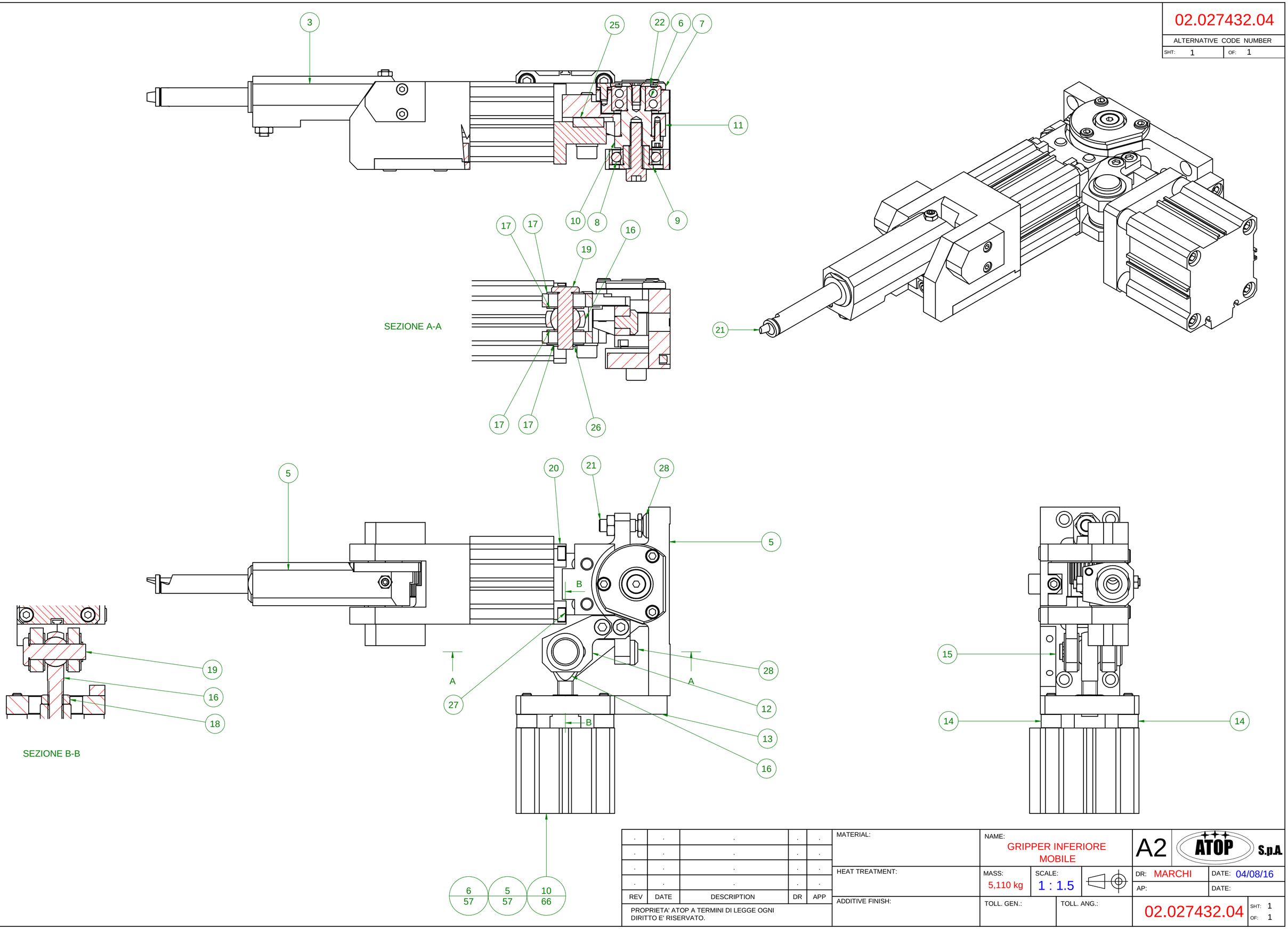

02.027432.04

ALTERNATIVE CODE NUMBER

SHT: 1 OF: 1

REV	DATE	DESCRIPTION	DR	APP
.	.	.	.	.
.	.	.	.	.
.	.	.	.	.
.	.	.	.	.

PROPRIETA' ATOP A TERMINI DI LEGGE OGNI DIRITTO E' RISERVATO.

MATERIAL:

HEAT TREATMENT:

ADDITIVE FINISH:

NAME: GRIPPER INFERIORE MOBILE

MASS: 5,110 kg

SCALE: 1 : 1.5

TOLL. GEN.:

TOLL. ANG.:

A2

ATOP S.p.A.

DR: MARCHI

DATE: 04/08/16

AP:

DATE:

02.027432.04

SHT: 1

OF: 1