02.026788.01

ALTERNATIVE CODE NUMBER

SHT: 1 OF: 1

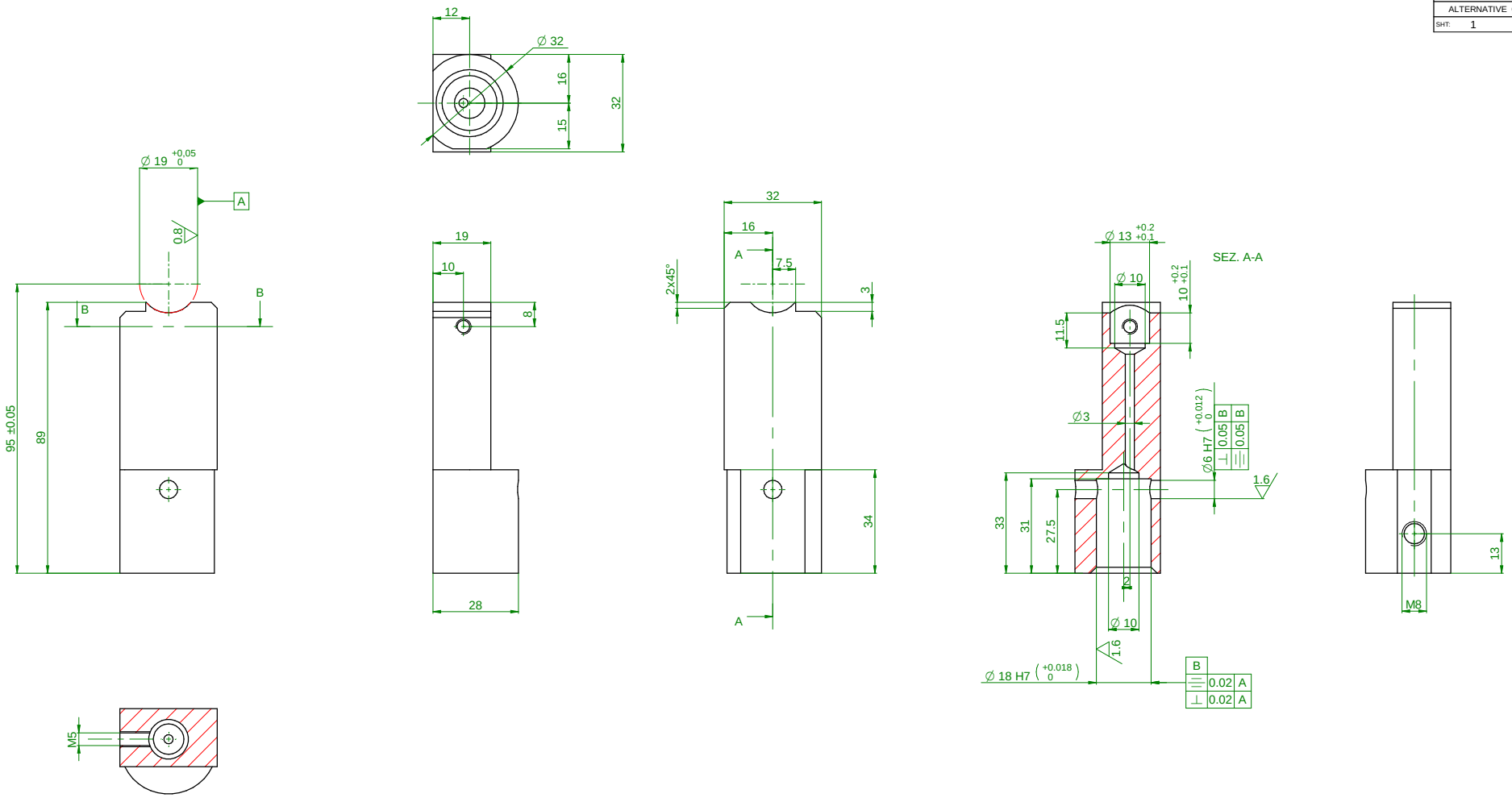

SMUSSARE SPIGOLI 0.5x45°

3.2 (1.6 0.8)

REV	DATE	DESCRIPTION	DR	APP
.	.	.	.	.
.	.	.	.	.
.	.	.	.	.
.	.	.	.	.

PROPRIETA' ATOP A TERMINI DI LEGGE OGNI DIRITTO E' RISERVATO.

MATERIAL: X 205 Cr 12 KU UNI2955 (K100)

HEAT TREATMENT: TEMPRA + RINVENIMENTO HRC 56-58

ADDITIVE FINISH:

NAME: CULLA SOLLEVATORE Ø19 HP10-20

MASS: 363 g

SCALE: 1 : 1

TOLL. GEN.: UNI 2768-mk

TOLL. ANG.: UNI 2768-m

A2

ATOP S.p.A.

DR: fabriziogiachetti DATE: 03.05.2016

AP: DATE:

02.026788.01

SHT: 1 OF: 1